Assembly Guide

Lingo, Double ST1 with shelf reinforcement

WE ARE LIBRARY PEOPLE®

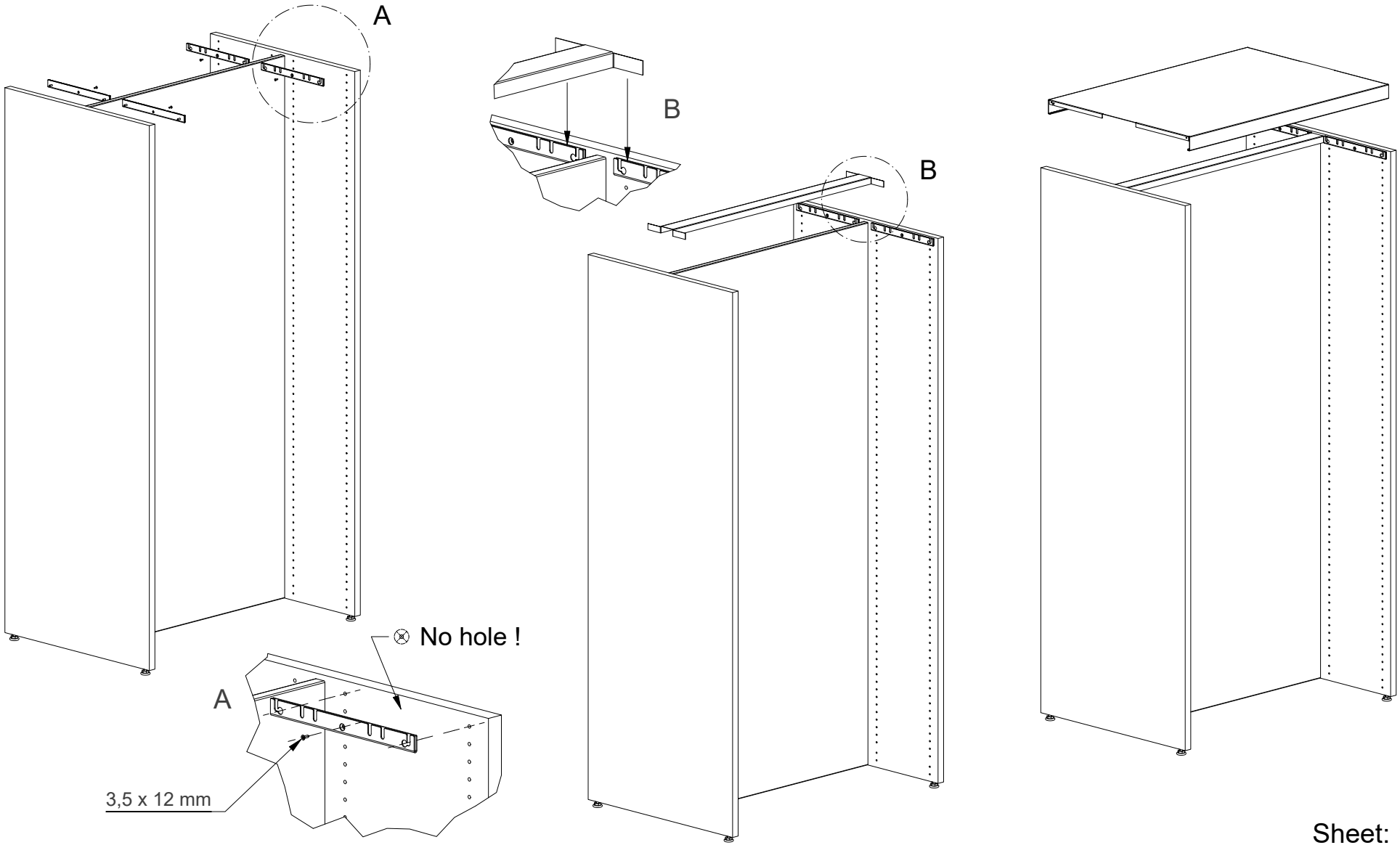

Sheet: 1 / 1