Assembly Guide

Lingo, Bracket f/ steel shelf.

WE ARE LIBRARY PEOPLE ®

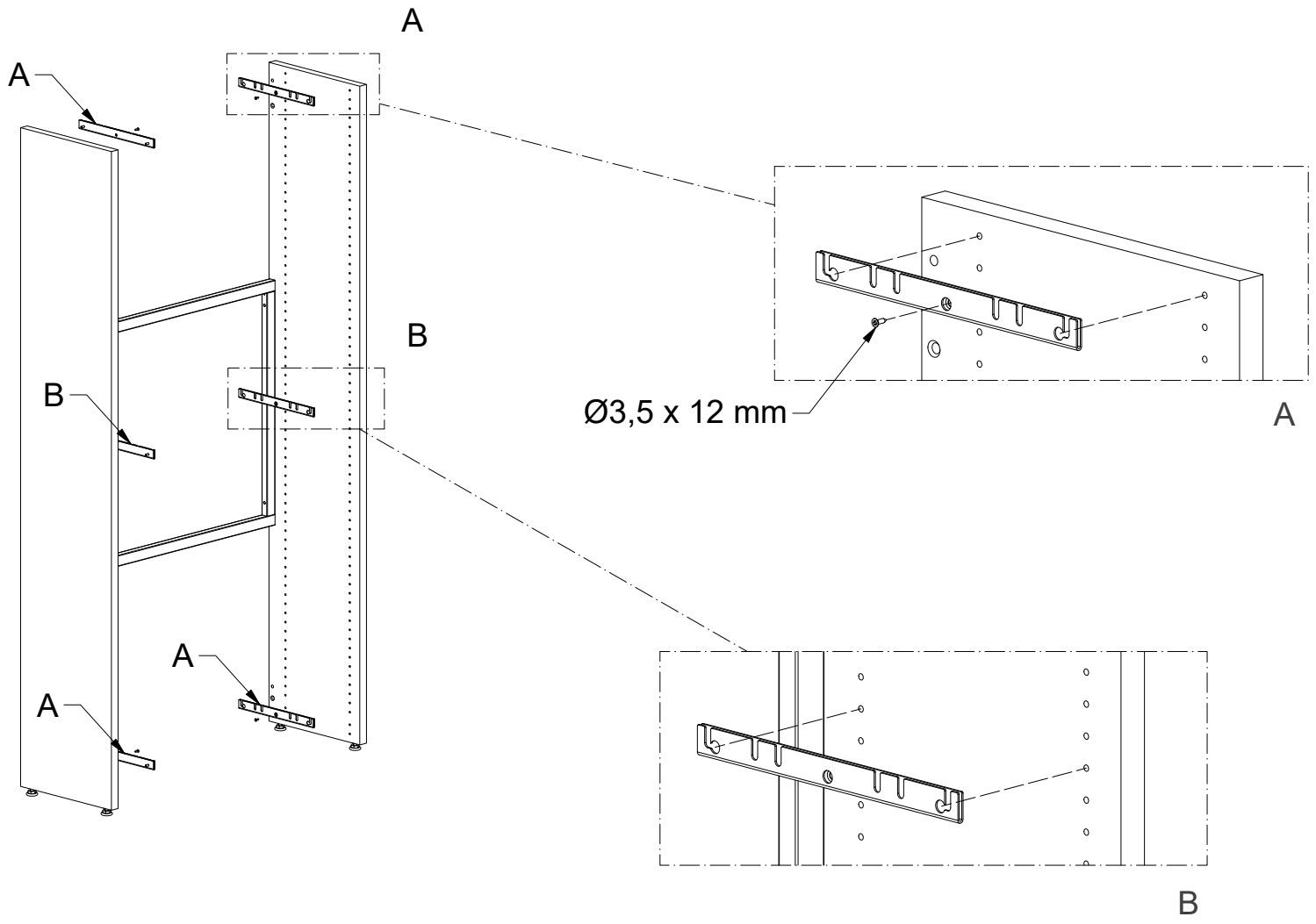

Sheet: 1 / 3

Assembly Guide

Lingo, Bracket f/ steel shelf.

WE ARE LIBRARY PEOPLE ®

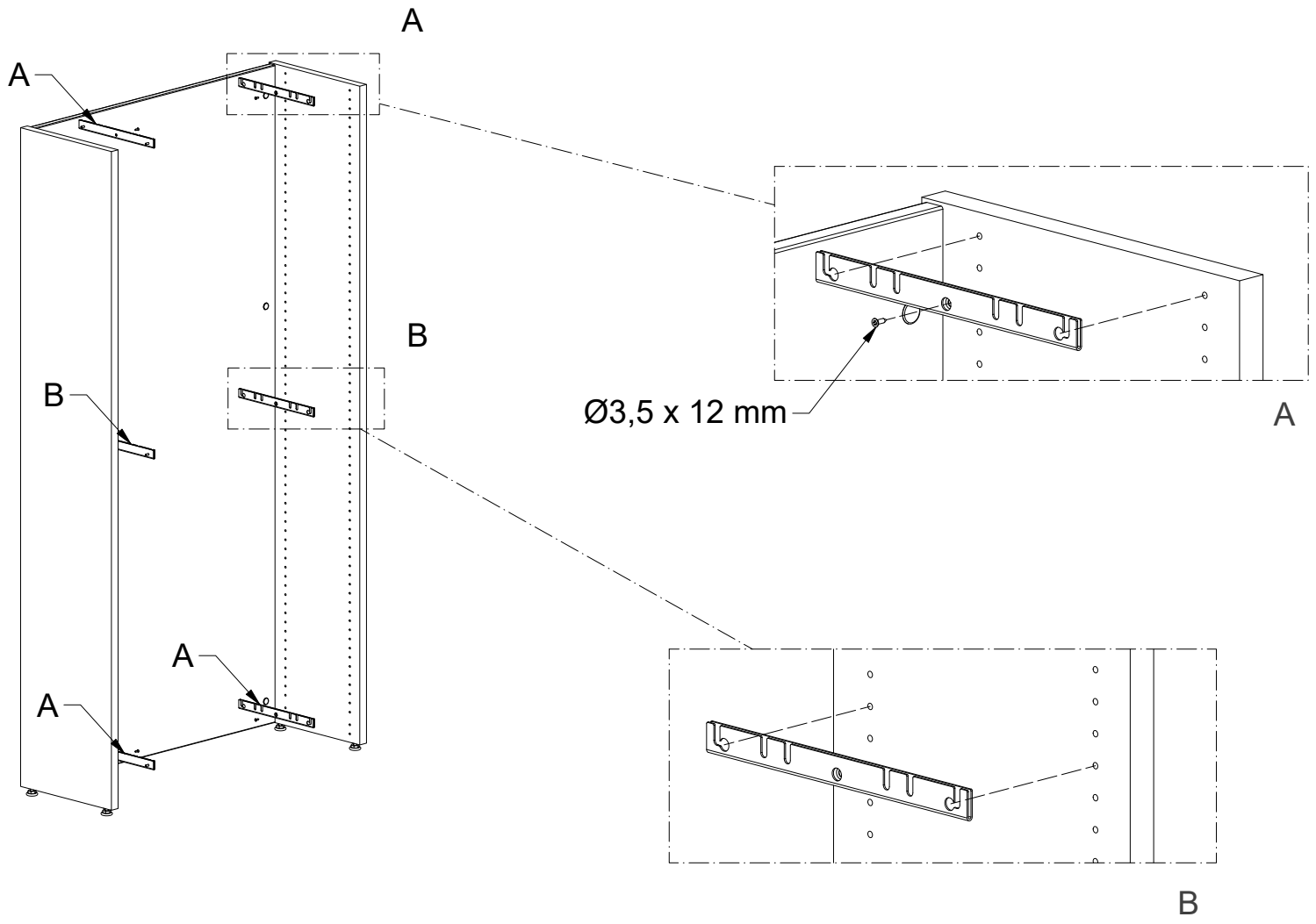

Sheet: 2 / 3

Assembly Guide

Lingo, Bracket f/ steel shelf.

WE ARE LIBRARY PEOPLE ®

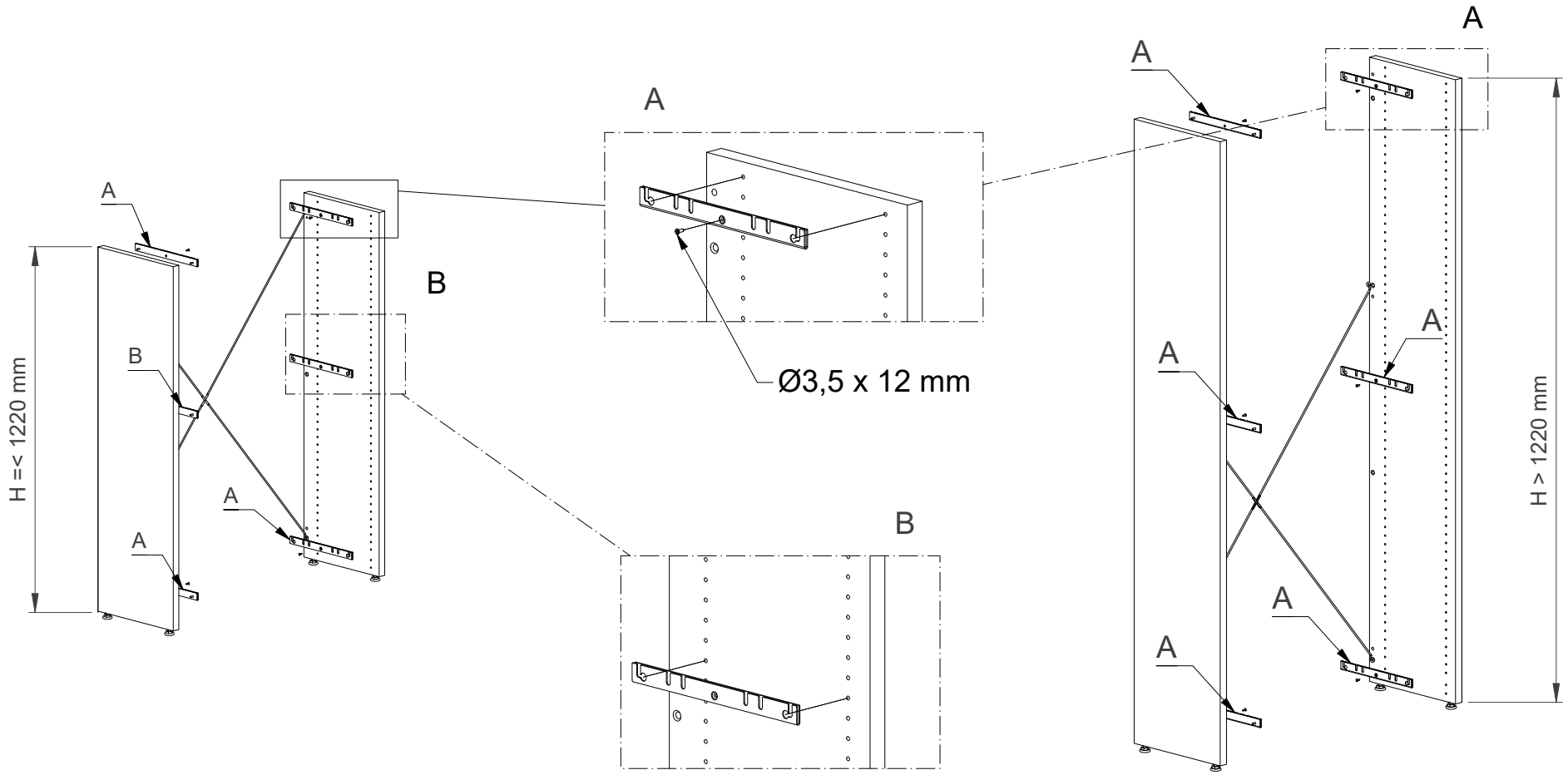

Sheet: 3 / 3