Assembly Guide

Lingo magazine display w/ 1 tip up sloping shelf

WE ARE LIBRARY PEOPLE®

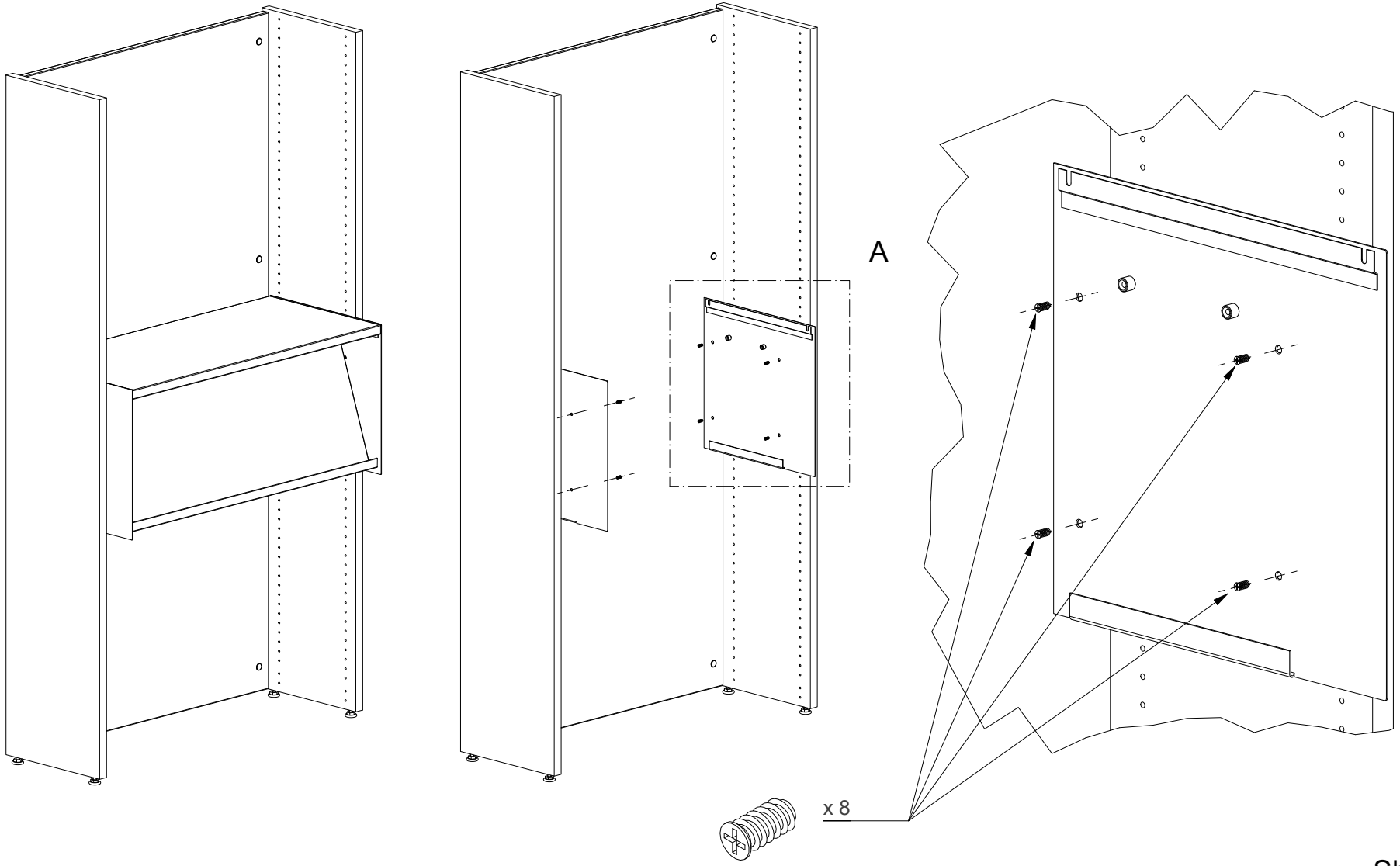

Sheet: 1 / 3

Assembly Guide

Lingo magazine display w/ 1 tip up sloping shelf

WE ARE LIBRARY PEOPLE®

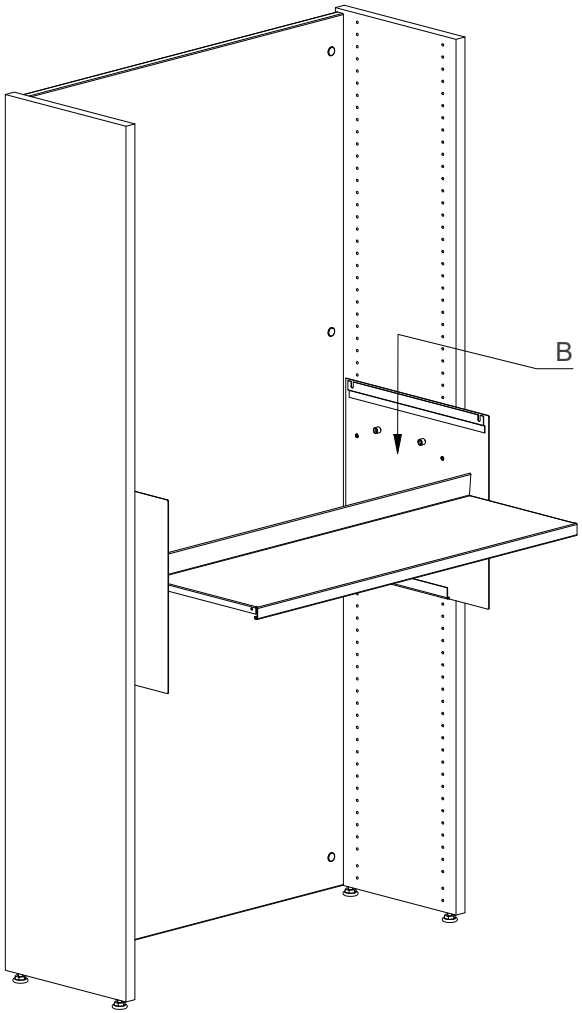

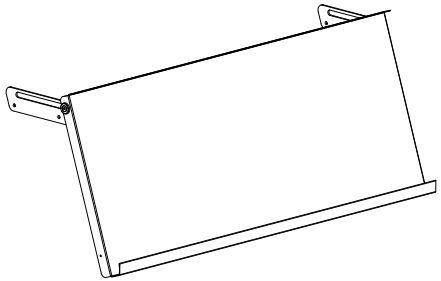

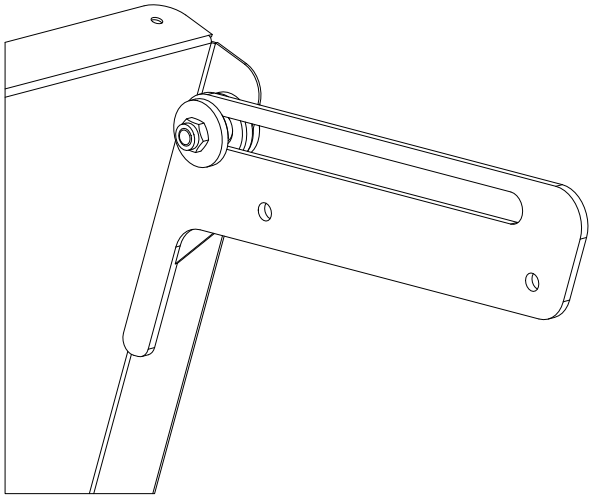

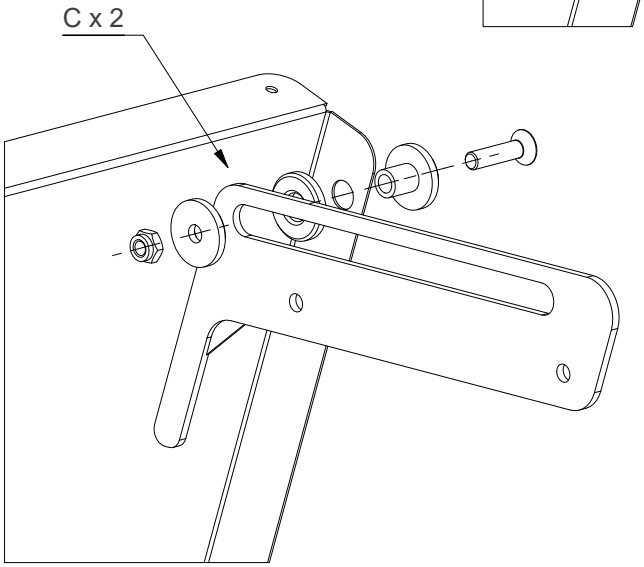

Sheet: 2 / 3

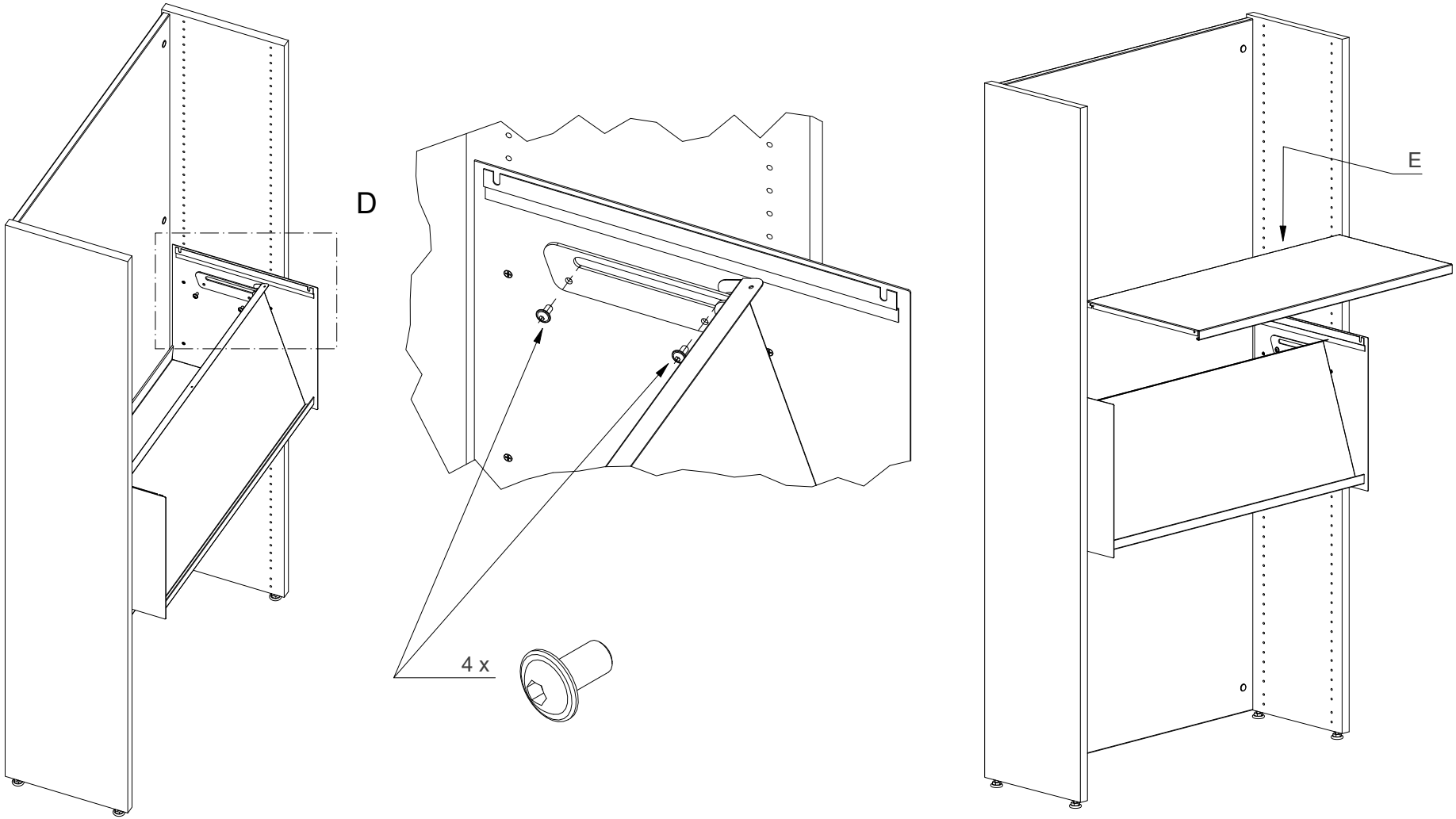

Sheet: 3 / 3