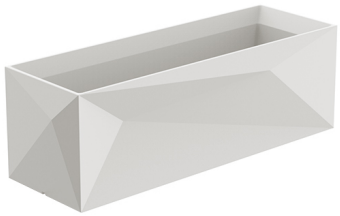

FAZ JARDINIERE 40x120x40cm

By Ramon Esteve

Ramón Esteve, architect of harmony, serenity, timelessness and universality has created mineral and emphatic shapes that make FAZ a design that contextualizes with homes and installations. An ambience, encircling as a result of the blissful combination of the material and lighting, so that the sole sensation would be its fusion. Their VONDOM spirit is experienced exclusively in the quality of the material that permits an exterior using even in the most exacting environments. The modularity of FAZ permits the consumers to adapt the furniture and flowerpots to their style and needs without losing the harmony of this furniture set. It’s upholstery is available in excellent quality nautical canvas or polyester fabric. The result is a product that transmits essence, that contains the complexity and the density of a work finalized to the extreme degree, the purpose of which is to create desirable places to live. ca vivir.

View online: https://www.vondom.com/products/54176A

Features

Description

Pot made of polyethylene resin by rotational moulding.100% Recyclable. Item suitable for indoor and outdoor use. Available in different finishes.

Weight

13.32 Kg

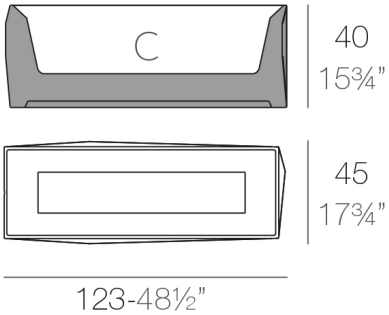

FAZ Jardinera C = 117,5 x 38 x 27 cm
FAZ Jardiniere C = 46¼" x 15 x 10¾”

Finishes

BASIC

Ref. 54176A

Matt Polyethylene

SELF-WATERING

Ref. 54176R

Self-watering system included in all planters except those with basic finish

LACQUERED

Ref. 54176F

Lacquered Polyethylene

RGBW LED

Ref. 54176L

Unit with internal lighting with RGBW LED technology and remote control unit for switching colors. Available only in matte ice white finish. Remote control included.

RGBW LED DMX

Ref. 54176D

Unit with internal lighting with RGBW LED technology and remote control unit for switching colors. Also controlLED by DMX-1024 (wireless), enabling communication between one or more products simultaneously via the DMX transmitter (not included).

LIGHT

Ref. 54176W

White internally lit unit with LED technology. Available only in matte ice white finish.

RGBW LED BATTERY

Ref. 54176Y

Unit with internal lighting with battery-powered RGBW LED technology. Includes charger and remote control for switching colors and charger. Available only in matte ice white finish.

RGBW LED DMX BATTERY

Ref. 54176DY

Unit with internal lighting with RGBW LED technology and remote control unit for switching colors. Also controlLED by DMX-1024 (wireless), enabling communication between one or more products simultaneously via the DMX transmitter (not included).

COLOR	BASIC	LACQUERED / LACADO	LUZ	AUTORRIEGO	LED RGB DMX BATERIA
ICE	■	■	■	■	■
WHITE	■	■	■	■	■
BLACK	■	■	■	■	■
BRONZE	■	■	■	■	■
STEEL	■	■	■	■	■
ANTHRACITE	■	■	■	■	■
RED	■	■	■	■	■
PISTACHIO	■	■	■	■	■
ORANGE	■	■	■	■	■
KHAKI	■	■	■	■	■
NAVY	■	■	■	■	■
TAUPE	■	■	■	■	■
PLUM	■	■	■	■	■
ECRU	■	■	■	■	■
BEIGE	■	■	■	■	■
CHAMPANY	■	■	■	■	■